No.	タイトル TITLE	図面番号 DRAWING No.	改版 REVISION	備　　考 REMARKS
1	CONTENTS OF DRAWING SUBMITTING	—	—	
2	SPECIFICATION OF RADAR LEVEL TRANSMITTER	—	0	
3	DIMENSION DIAGRAM OF RADAR LEVEL TRANSMITTER	C31B0324	0	
4	CONSTRUCTION DIAGRAM OF MICROWAVE LEVEL METER	C33B0054	0	
5	ACCESSORY LIST	—	0	
	BLANK SPACE			

CD:

MESSRS.　　E.S.T.No.　4220203

ORDER No.　　ACCEPT No.　23K1821

Matsushima
Matsushima Measure Tech

TITLE
提出図面目録
CONTENTS OF DRAWING SUBMITTING

No.	DATE	CHECK'D	APP'D
△			
△			
△			
△			
	Jun. 11. 2023	D. Inoue	K. Nakamura

1. Application		–
2. TAG No.		–
3. Type		MWLM-PR26H
4. Code		MWLM-PR26H7GSN
5. Power supply		DC13 to 36V　* When mounting the LCD adfjustment unit: 16 to 36V
6. Power consumption		800mW
7. Mounting		JIS10K400A FF Flange
8. Dead zone		1.0m below the antenna
9. Max. measuring distance		70.0m　* from measurement reference zero point
10. Transmitting frequency		Approx. 26GHz
11. Transmitting cycle		every 83ms
12. Beam angle (-3dB)		Approx. 8deg.　(16deg including side beam)
13. Resolution		1mm
14. Allowable fluctuation rate		10cm/s
15. Accuracy		≦1.2m: ±20mm、 >1.2m: ±10mm
16. Temp. error		±0.03% / 10K, Max.±0.3%
17. Ambient temp.	Housing	-40 to +80℃ (with LCD: -20 to +60℃) (1h warm-up operation required under -20℃)
	Antenna	-40 to +150℃
18. Allowable pressure		Max.1MPa
19. Protection		IP67（Housing cover and lead outlet must be closed.）
20. Lead outlet		Power･Signal Con.
21. Output signal		DC 4 to 20mA × 1　(Max. 650Ω resistive load at DC24V)
22. Integration time		0 to 999s
23. Mass		Approx. 71 kg / pc.
24. Painting color		Munsell 7.5GY6/10
25. Quantity		2 pcs
26. Utility	Cooling Air	Fluid: Air　Flow rate: 226~368L／min Pressure: 0.4 ～ 0.7MPa Temperature: 35℃Below
	Antenna Purge	Fluid: N2　Flow rate: 147L／min Pressure: (Pressure in the tank)+0.98kPa Temperature: 35℃Below
27. Measuring and Process Condition	Measuring span	2.5 m (100%)　to　30　m (0%)　(※1)
	Material to measured	「　」
	Particle size	「　」
	Level variation speed	「　」cm/s
	Bulk density	「　」
	Angle of repose	「　」deg
	Material temperature	「　」℃
	Ambient temperature	「　」℃
	Process temerature	「　」℃
	Process pressure	「　」Pa
	Fume	YES ／ NO
	Moisture content	「　」%
28. Accessories		LCD Adjustment unit(GRAPHIC COM4)　2pcs

(※1)　It shows factory setting parameters and may change at the site according to the actual measurement conditions.

(Remaks)
① Measuring range and accuracy specified above is of standard catalog specification and may change according to measurement conditions.
② Make sure that lead outlet is securely fastened.
Otherwise, it may cause malfunction due to ingress of water.
③ No noise/surge and Ripple (P-P) 10% or below is required at instrumentation power applied.
④ Such installation that tip of the antenna protrudes in vessel from edge of nozzle is recommended.
⑤ Such proetective measures to keep no freezing/condensation in electronics part is required.
⑥ Note that some kind of gas or fume may penetrate PTFE cone part and cause malfunction.
Please take special note especially for corrosive gasa such as H2S, HCI, HF, etc.
⑦ The air for Air cooler, Air purge for dust-proof antenna cap should be passed through a Mist separator, Air filter etc. to remove moisture, oil content etc..
Before starting air supply, flush the pipe to remove any foreign material from inside the pipe.

MESSRS	E.S.T.No.　4220203	△			
ORDER.No.	ACCEPT.No. 23K1821	△			
Matsushima Measure Tech	TITLE	△			
	Specification of Radar Level Transmitter	-	Jul.11.2023	D.Inoue	T.Iwamoto
	MWLM-PR26H (MWLM-PR26H7GSN)	No.	DATE	CHECK'D	APP'D

TYPE	MWLM-PR26H
CODE	MWLM-PR26H7GSN

REV. No.	REV. DATE
REVISED	APPROVED
REMARKS	

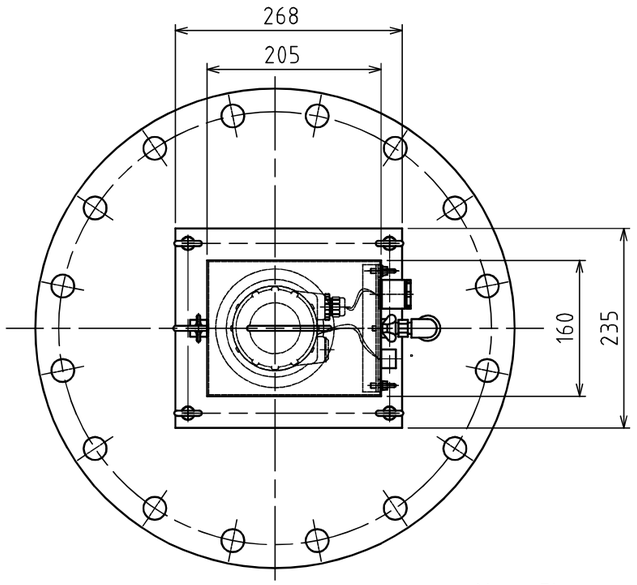

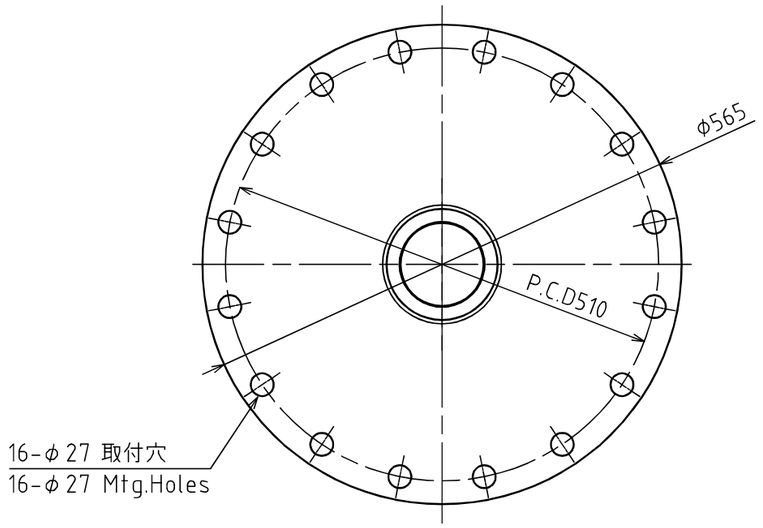

据付面詳細図
Mounting face detailed drawing

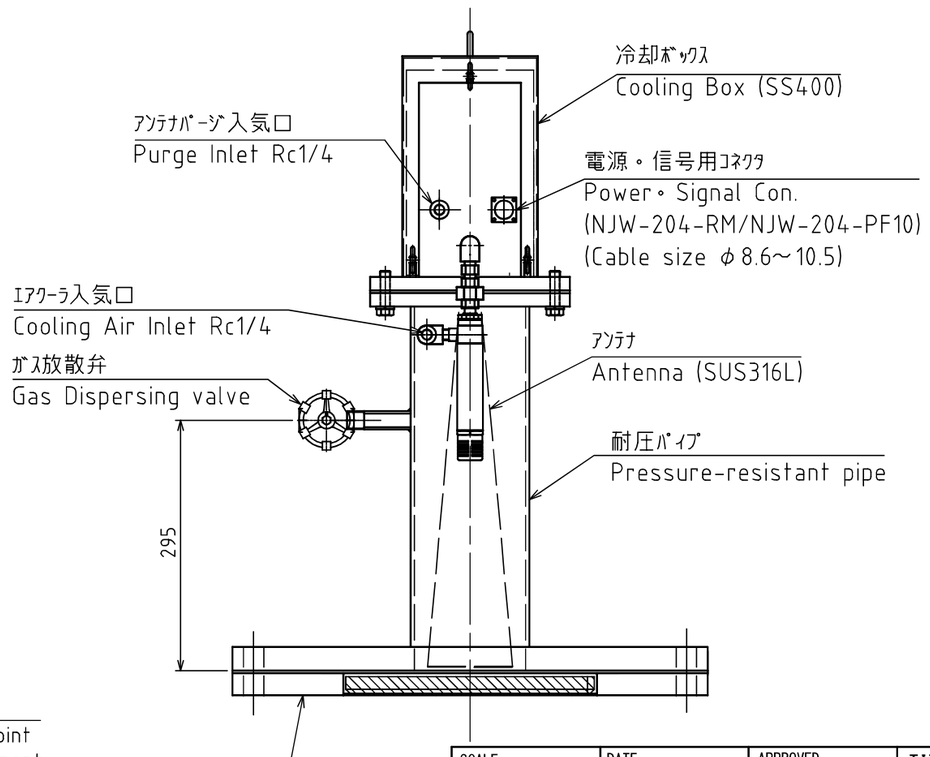

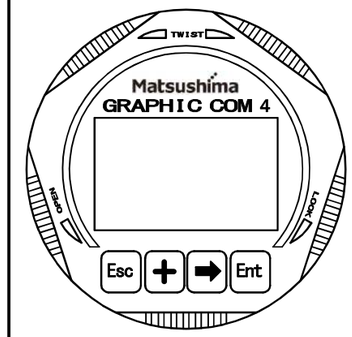

LCD 調整ユニット（オプション）
LCD Adjustment unit (Option)

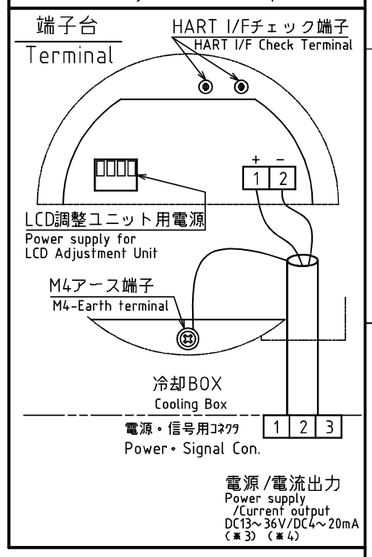

(※1) 必ず接地して下さい。（D種接地）
Please insure connection to earth.
(※2) ハウジングは310°範囲で回転します。
The housing can be rotated by 310°
without the use of any tools.
(※3) LCD調整ユニットを取り付けるときは
16V～36Vにして下さい。
When mounting the LCD adjustment
unit, set it from 16V to 36V.
(※4) 推奨：2線シールドケーブル
Recommended cable:Two wire shield cable

SCALE	DATE	APPROVED	TITLE
1:7	Jul. 10. 2023	T. Iwamoto	レーダー式マイクロ波レベル計外形図
UNITS	DRAWN	CHECKED	DIMENSION DIAGRAM OF RADAR LEVEL TRANSMITTER
mm	D. Inoue	D. Inoue	

Matsushima
Matsushima Measure Tech

DRAWING NO. C31B0324

REV. No. △

REV. No.	△	REV. DATE
REVISED		APPROVED
REMARKS		

エアクーラ用エア
Air for supplying to Air Cooler
FLUID：AIR
226～368NL/min
SUPPLY PRESSURE：0.4～0.7MPa

エアーコンビネーション
AIR
COMBINATION

電気室
ELECTRIC ROOM

供給電源　POWER SUPPLY
DC13 ～ 36V

HART通信
HART communication

供給電源　POWER SUPPLY
AC85～264V 50/60Hz
単相 SINGLE-PHASE

調整用PC
MAINTENANCE
P.C.

通信用モデム
(PC接続ケーブル付)
PC data communication cable

ANTENNA PURGE
FLUID:N2
147NL/min

(SUPPLY PRESSURE SHOULD BE
AT LEAST 0.1MPa HIGHER THAN
FURNACE TOP PRESSURE.)

エアーコンビネーション
AIR
COMBINATION

圧力スイッチ
PRESSURE
SWITCH

印は、納入範囲を示す
shows the scope of supply

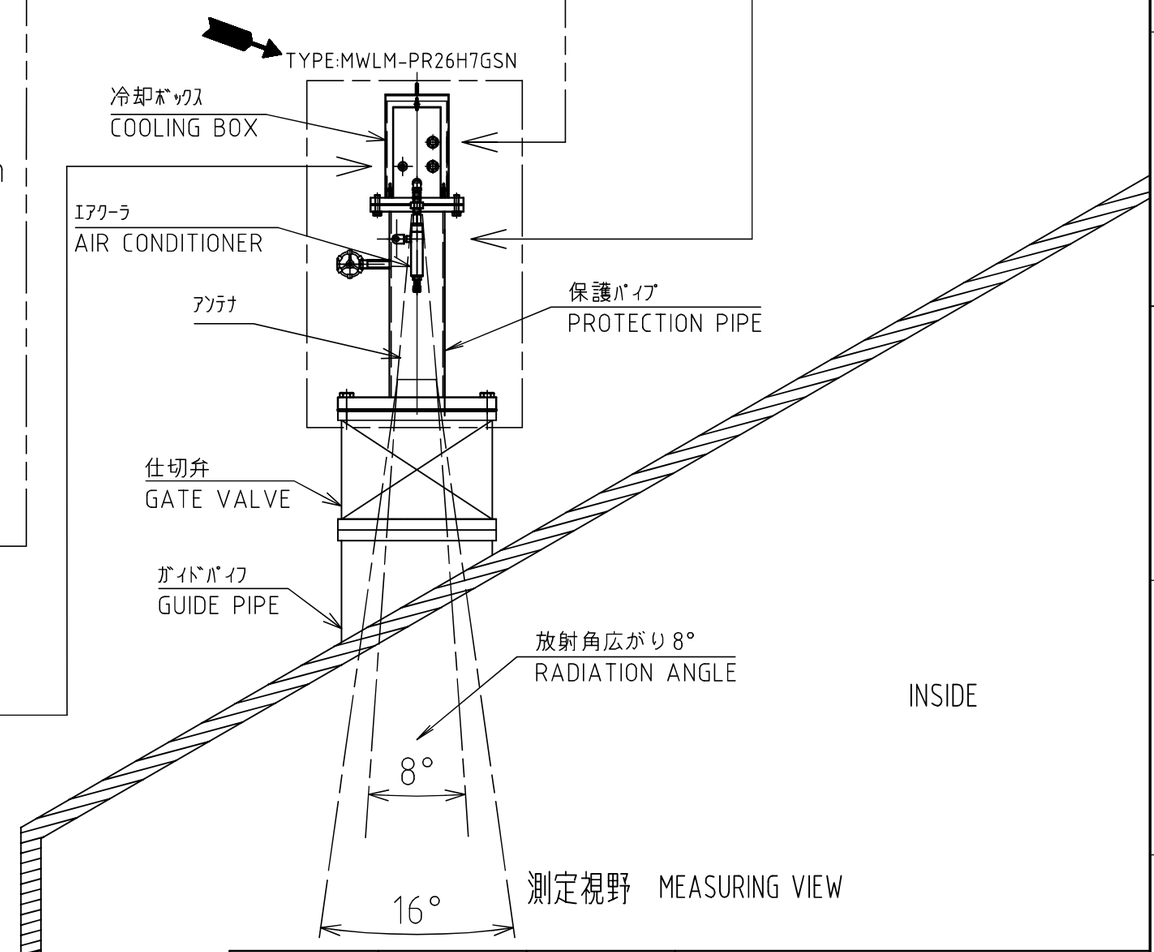

SCALE	DATE	APPROVED	TITLE
	Jul. 10. 2023	T. Iwamoto	マイクロ波レベル計　構成図
UNITS	DRAWN	CHECKED	CONSTRUCTION DIAGRAM OF MICROWAVE LEVEL METER
mm	D. Inoue	D. Inoue	
Matsushima Measure Tech			DRAWING NO. C33B0054 / REV. No. △

付属品リスト
ACCESSORY LIST

No.	TITLE	DRAWING No.	RECITAL
1	Protection board × 2	—	Material:PTFE
2			
3			
4			
5			
6			
7			
8			
9			
10			
11			
12			
13			
14			
15			
16			
17			
18			
19			
20			

MESSRS.　　E.S.T.No.

ORDER.No　　ACCEPT.No. 23K0903

Matsushima
Matsushima Measure Tech

TITLE
付属品リスト
ACCESSORY LIST

No.	DATE	CHECK'D	APP'D
△			
△			
△			
	Jul.11.2023	H.Matsuo	D.Inoue